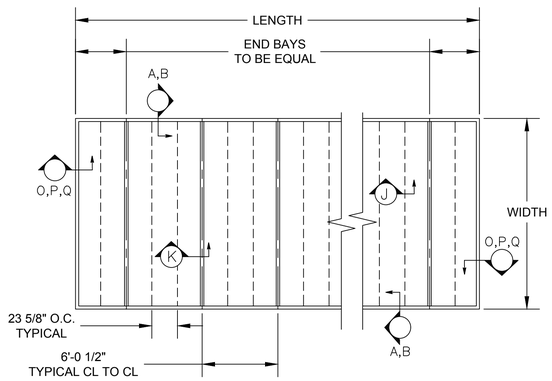

PLANVIEW

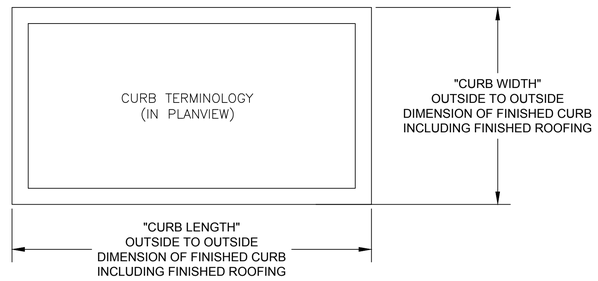

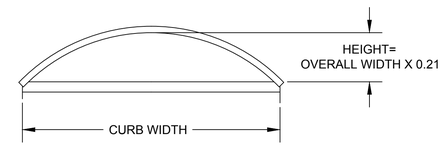

LOW-RISE ELEVATION

SYSTEM IS SHOWN AS 2.75" QUADWALL PANEL THICKNESS. A 4" QUADWALL PANEL THICKNESS SYSTEM IS USED BASED ON SPAN AND LOADING CONSIDERATIONS.

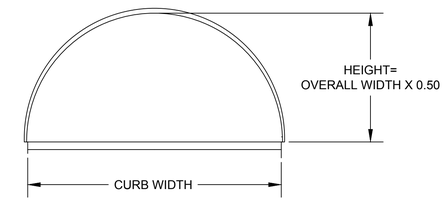

HALF ROUND ELEVATION

NOMINAL HEIGHT:
FROM TOP OF CURB TO
BOTTOM OF CPI RAFTER AT
APEX OF SKYLIGHT

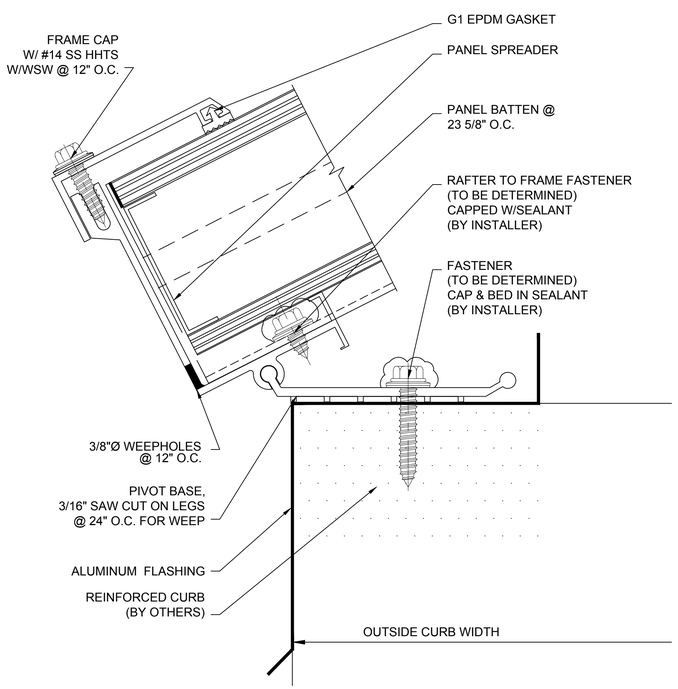

A SECTION @ SILL (LOW-RISE)
2.75" QUADWALL SYSTEM
(4" QUADWALL SYSTEM SIMILAR)

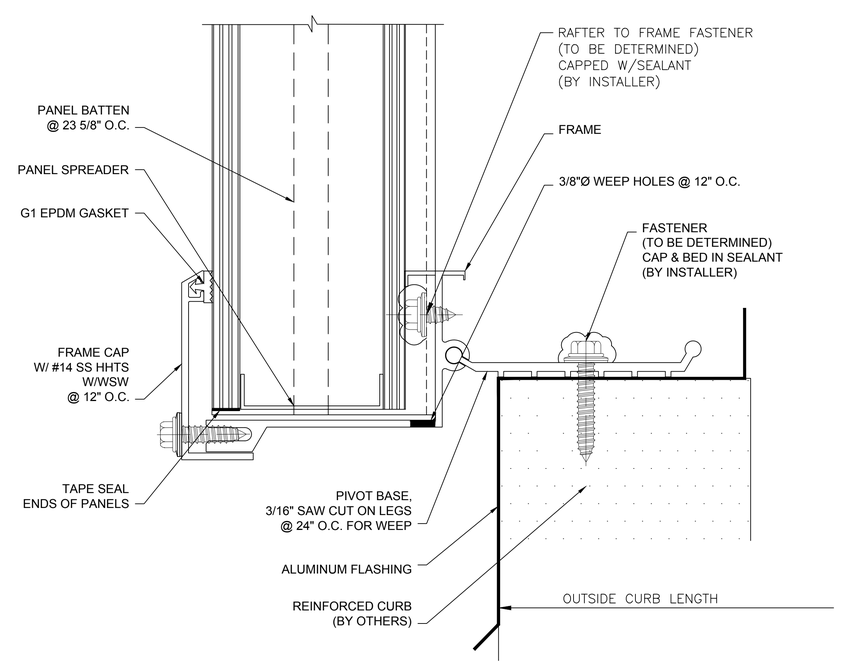

B SECTION @ SILL (HALF ROUND)
2.75" QUADWALL SYSTEM
(4" QUADWALL SYSTEM SIMILAR)

CUSTOM SKYLIGHTS

QUADWALL

VAULT - SYSTEM (2.75" OR 4") DETERMINED BY DESIGN LOADS

CPI Daylighting
Building Envelope Solutions

Kingspan. Light+Air

28662 N. Ballard Drive
Lake Forest, IL 60045 USA

T: +1 847.816.1060
F: +1 847.816.0475

Note

The standard details shown are for reference only.

Please contact our Architectural Support Department for job specific details and for information regarding the usage, limitations, and or code requirements pertaining to this product, please contact us at:

support@cpidaylighting.com

Details are subject to change and should be verified with our Architectural Support Department prior to implementation, please contact us at: **support@cpidaylighting.com**

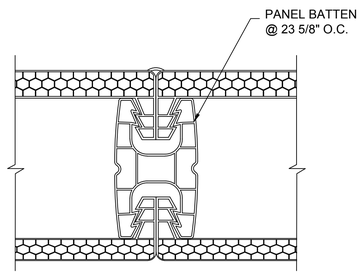

J SECTION @ BATTEN
2.75" QUADWALL SYSTEM

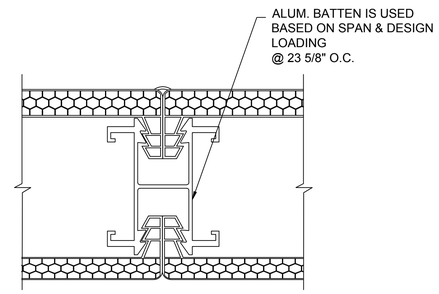

J_2 SECTION @ BATTEN
2.75" QUADWALL SYSTEM

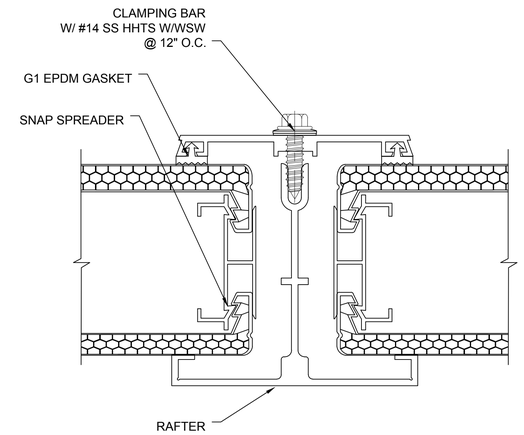

K SECTION @ RAFTER
2.75" QUADWALL SYSTEM

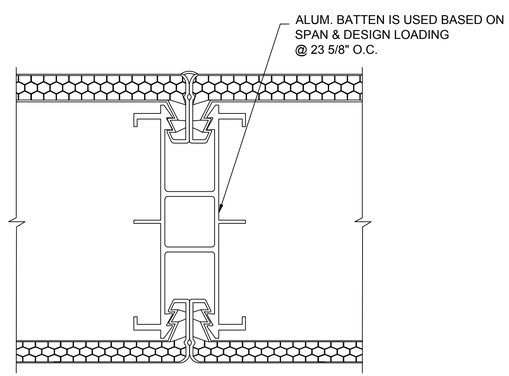

J_3 SECTION @ BATTEN
4" QUADWALL SYSTEM

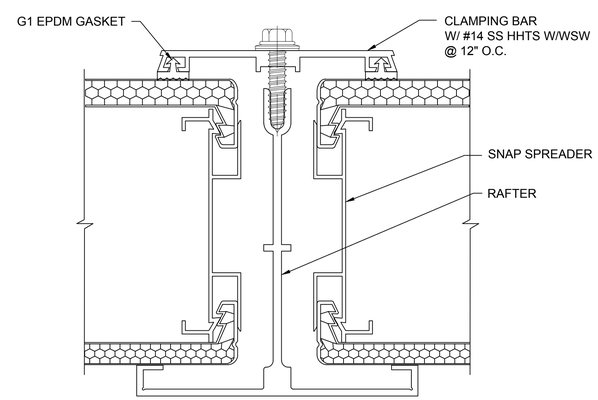

K_2 SECTION @ RAFTER
4" QUADWALL SYSTEM

CUSTOM SKYLIGHTS

QUADWALL

VAULT - SYSTEM (2.75" OR 4") DETERMINED BY DESIGN LOADS

CPI Daylighting
Building Envelope Solutions

Kingspan. Light+Air

28662 N. Ballard Drive
Lake Forest, IL 60045 USA

T: +1 847.816.1060
F: +1 847.816.0475

Note

The standard details shown are for reference only.

Please contact our Architectural Support Department for job specific details and for information regarding the usage, limitations, and or code requirements pertaining to this product, please contact us at:

support@cpidaylighting.com

Details are subject to change and should be verified with our Architectural Support Department prior to implementation, please contact us at: **support@cpidaylighting.com**

SHEET NO.

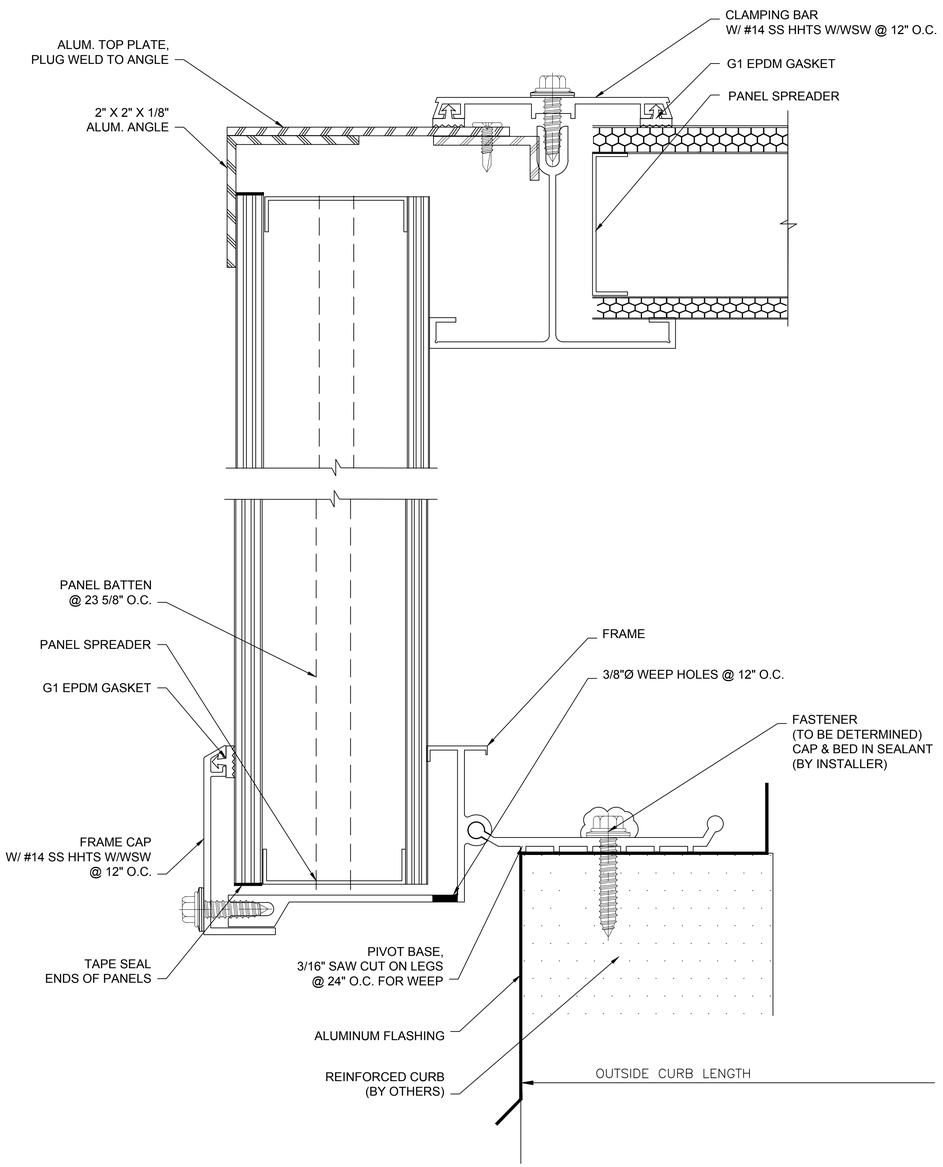

O SECTION @ GABLE END
2.75" QUADWALL SYSTEM
(4" QUADWALL SYSTEM SIMILAR)

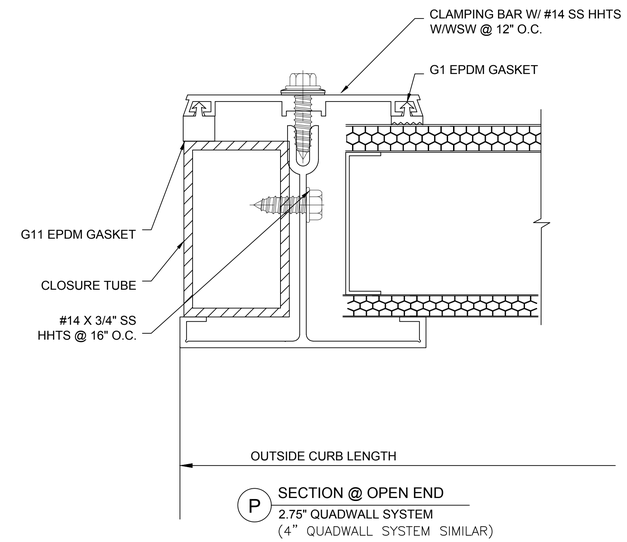

P SECTION @ OPEN END
2.75" QUADWALL SYSTEM
(4" QUADWALL SYSTEM SIMILAR)

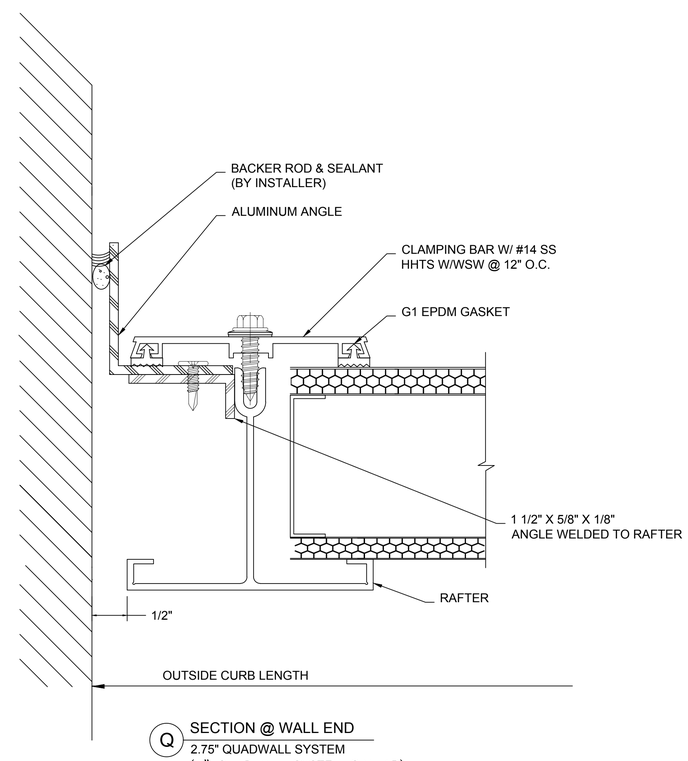

Q SECTION @ WALL END
2.75" QUADWALL SYSTEM
(4" QUADWALL SYSTEM SIMILAR)

CUSTOM SKYLIGHTS

QUADWALL

VAULT - SYSTEM (2.75" OR 4") DETERMINED BY DESIGN LOADS

CPI Daylighting
Building Envelope Solutions

Kingspan. Light+Air

28662 N. Ballard Drive
Lake Forest, IL 60045 USA

T: +1 847.816.1060
F: +1 847.816.0475

Note

The standard details shown are for reference only.

Please contact our Architectural Support Department for job specific details and for information regarding the usage, limitations, and or code requirements pertaining to this product, please contact us at:

support@cpidaylighting.com

Details are subject to change and should be verified with our Architectural Support Department prior to implementation, please contact us at: **support@cpidaylighting.com**

SHEET NO.

3 OF 3